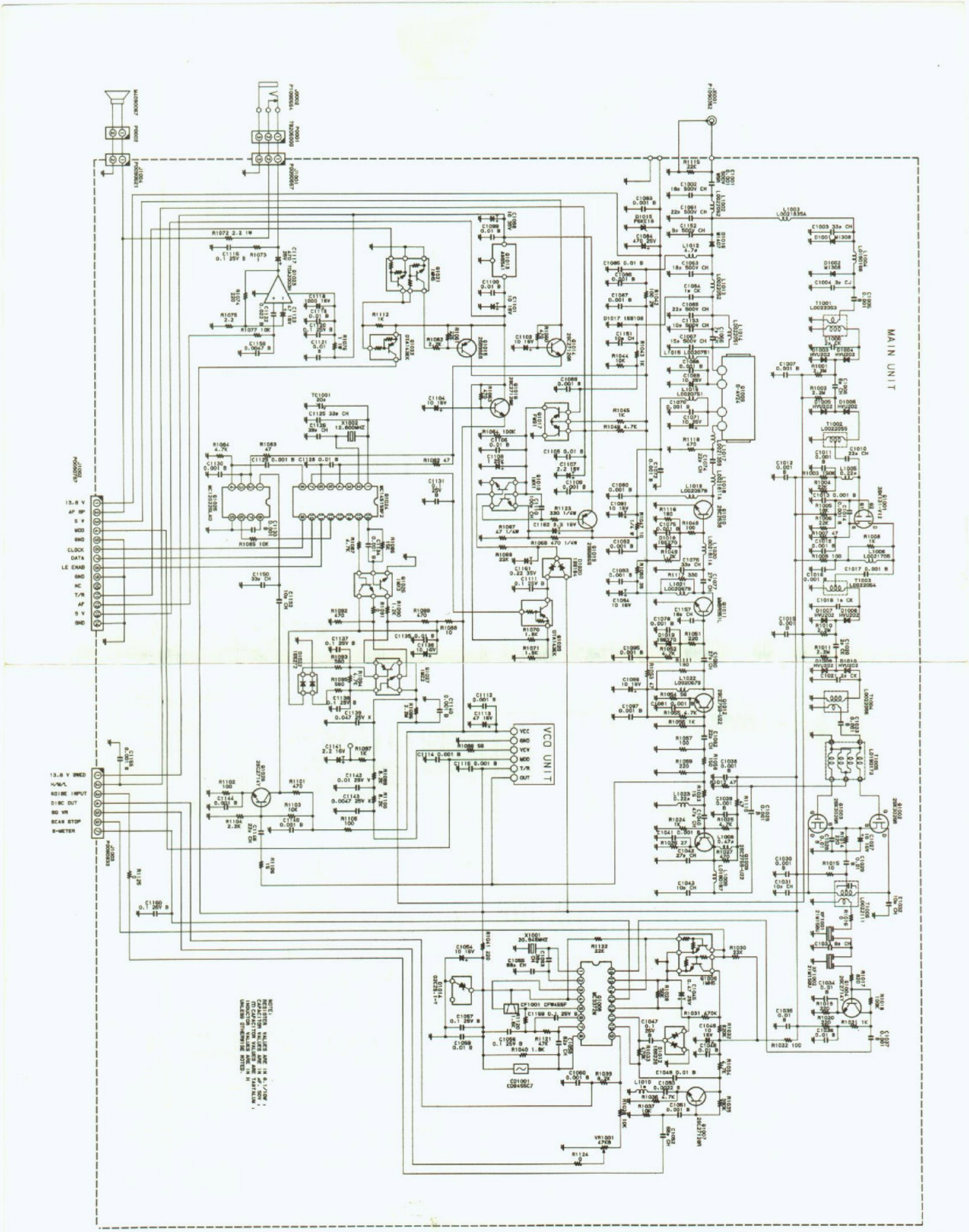
MAIN UNIT
VCO UNIT
VCC
GND
VCV
MOD
T/R
OUT
13.8 V
AF BP
5 V
MOD
GND
CLOCK
DATA
LE ENAB
GND
NC
T/R
AF
5 V
GND
13.8 V SWED
H/M/L
NOISE INPUT
DISC OUT
SQ VR
SCAN STOP
S-METER
NOTE:
1. RESISTER VALUES ARE IN Ω 1/4W ;
2. CAPACITOR VALUES ARE IN μF ;
3. INDUCTOR VALUES ARE IN μH
UNLESS OTHERWISE NOTED.